[Engine Room R/B and Engine Room J/B Inner Circuit]

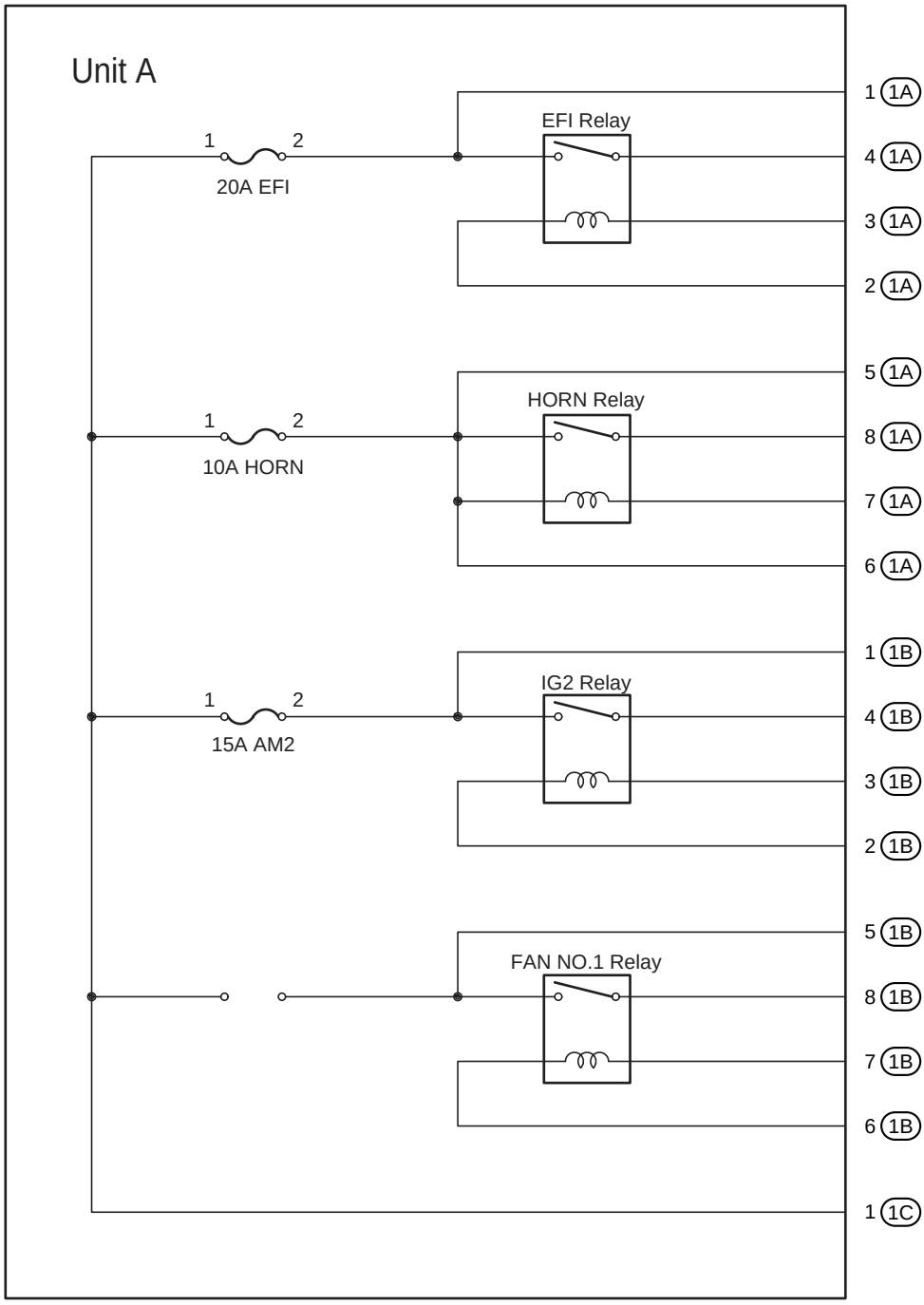

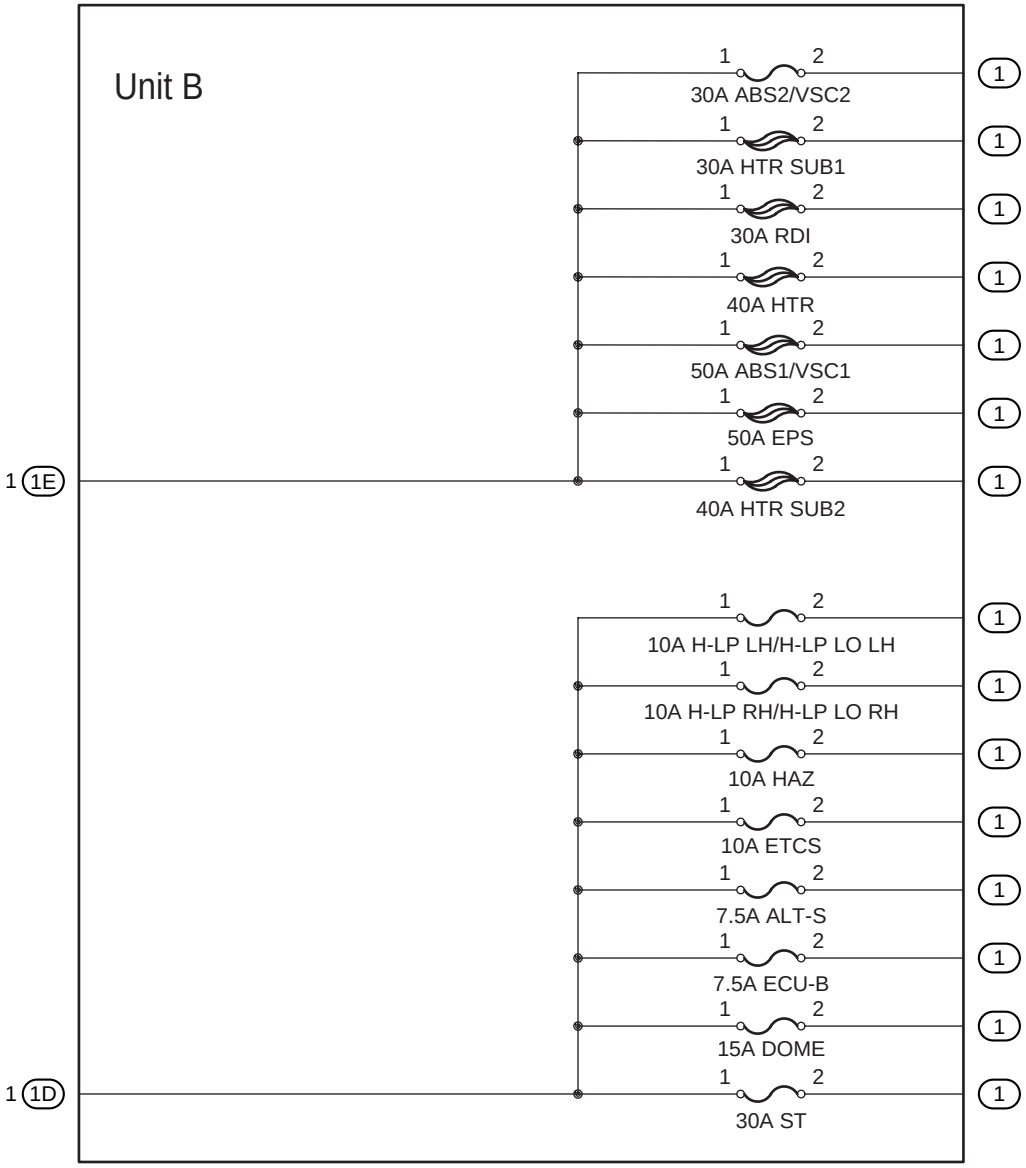
Unit B
30A ABS2/VSC2
30A HTR SUB1
30A RDI
40A HTR
50A ABS1/VSC1
50A EPS
40A HTR SUB2
10A H-LP LH/H-LP LO LH
10A H-LP RH/H-LP LO RH
10A HAZ
10A ETCS
7.5A ALT-S
7.5A ECU-B
15A DOME
30A ST
1 1E
1 1D